FITTING GUIDE

PROPRIO FOOT®

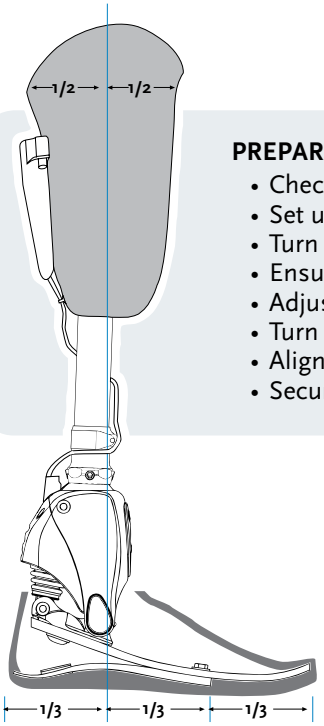

PREPARATION & BENCH ALIGNMENT

- Check battery level, charge if needed
- Set up & secure battery and cables
- Turn unit ON
- Ensure Relax Mode is turned OFF
- Adjust heel height to shoe or 10mm heel
- Turn unit OFF
- Align through the 1/3 portion
- Secure Flex-Foot sock with velcro

INITIAL FITTING CHECKLIST

- Turn unit ON
- Adjust heel height to shoe
- Ensure users sock is pulled up
- Ensure shoe tongue is deflected
- Have user don prosthesis
- Optimize static alignment
- Optimize dynamic alignment
- Assess heel stiffness (wedge if needed)
- Allow user 10–15 minutes of self selected walking
- Perform Calibration
- Personalize stair setting
- Turn Relax Mode ON
- Personalize Relax Mode settings

TRAINING CHECKLIST

- Recommend daily charging
- Charging & checking battery level
- Turning ON/OFF, keypad unlocking
- Setting the heel height
- Sock and shoe application
- Stairs: Explain adaptaion delay & drop off on level ground
- Ramps: Make sure user feels adaptation
- Relax mode / Chair exit behavior
- Driving: Turn OFF / Forced Relax mode
- Battery warning signals

TIPS & TRICKS

- Very slow walking speed won't trigger toe lift
- Sharp turns, zigzagging or stepping up high curbs may cause dorsiflexion
- Power loss results in plantarflexion
- Restricting the ankle in chair exit can result in error messages and ankle sticking in plantarflexion. This is not unusual
- If the ankle sticks in position, light tapping on the toe or heel can free it

Function	Hold	Press	BEEP
Power ON/OFF	I O		2 BEEPS=ON 3 BEEPS=OFF
Set heel height	I	O 2×	1× Start 1× Move 1× Complete
Manual motor movement	I	O 6×	N/A
Sound ON/OFF	O	I 7×	1× ON
Calibration ON/OFF	O	I 9×	1× ON/OFF

© Copyright Össur 2012

GENERAL INFORMATION

ACTIVITY	DESCRIPTION
LEVEL GROUND	• Toe lift occurs on the 3rd–4th prosthetic step. • Stepping off or on to a curb may result in a slight dorsiflexion on the next step.
HEEL HEIGHT ADJUSTMENT	• Range: MIN 0 mm. 50 MAX mm. • Train the user to adjust the heel height both while wearing the prosthesis and not wearing it. Set heel height | 2× | 1× Start, 1× Move, 1× Complete
ALIGNMENT & WEDGES	• Offset may be required for long residual limbs. • When using a wedge gently place it at the foot/heel junction. • DO NOT use force when placing wedges. • For temporary placement of wedges, use electrical tape. • For permanent fixture, use the adhesive provided. • Caution: A temporary fixed wedge will move over time, cause misalignment and functional issues. • Permanently fix wedge when final alignment has been achieved.
CALIBRATION	• Have the user adapt to the ankle on the factory settings before Calibration is performed. • Perform Calibration after completing the dynamic alignment and before training the user on stairs and ramps. • When performing the Calibration the surface has to be completely flat and 20 prosthetic steps long with no sharp turns. • Repeat Calibration if alignment is altered. Calibration ON/OFF | 9× | 1× ON/OFF
INCLINE & DECLINE	• The ankle gradually adapts to the angle of the incline/decline. • Full adaptaion is usually felt on the 3–4th prosthetic step into the incline/decline. • The ankle matches inclines 100% and 25% for declines. • Steep declines above 20° will trigger adaption to stairs, resulting in Dorsiflexion.
STAIRS	• Only use stairs with handrails for first time users, and 8 steps for optimal ankle performance! • Default is 4°, Max is 6° and OFF is no adaption (Same for up and down). • Quicker adaptaion to stairs is achieved by placing the prosthetic side first onto the stairs. • Stopping before stair decline usually delays adaption. Stair Mode Sequence | Hold | Press | Sound Stair Mode 4° | | | 2× BEEP Stair Mode 6° | | 3× | 3× BEEP Stair Mode OFF | | | 1× BEEP
RELAX MODE SETTINGS	• Relax Mode OFF (Default): Both settings turned OFF. Ankle acts as a mechanical foot when sitting. • Relax Mode ON:Relax and Chair Exit Mode functioning. • Chair Exit Mode Only: Relax Mode OFF and Chair Exit Mode ON. Mode Sequence | Hold | Press | Sound Relax Mode OFF | | | 1× BEEP Relax Mode ON | | 5× | 2× BEEP Chair Exit Mode only | | | 3× BEEP
RELAX MODE FUNCTION	• Move prosthesis to vertical or tap on floor. Movement occurs after 1 second delay. • If the motion is restricted, audible & vibratory signal are felt. • The motor cannot move under load. When movement is felt unload the prosthesis. • The motor may get stuck when restricted under load. Lightly tap the heel and toe while moving in and out of Relax Mode.