FLEX-FOOT® ASSURE™

The Flex-Foot Assure is ideal as a first prosthesis or a more permanent option for the less active, particularly those experiencing poor vascular health and/or diabetes.

Designed specifically for slower speed walkers, Flex-Foot Assure incorporates an active heel combined with the full-length keel that work together to protect the vulnerable sound limb. The proven design and simple fit of Assure allows basic ambulators to take advantage of premium technology just right for them.

USER INFORMATION	
Amputation Level:	Transfemoral and Transtibial
Impact Level:	Low
Maximum Patient Weight:	136kg (300lbs)

FOOT INFORMATION	
Categories:	1-5
Sizes:	19-30
Weight of Foot: (Size 27)	524g (18.5oz) w/ Pyramid and Foot Cover
Build Height: (Size 27)	127mm (5") w/ Pyramid and Foot Cover
Heel Height:	10mm (3/8")
Adapter Options:	Male Pyramid or Carbon Tube

FULL LENGTH TOE LEVER

PROPORTIONAL RESPONSE

ACTIVE TIBIAL PROGRESSION

CARBON-X® ACTIVE HEEL

CATEGORY SELECTION CHART

WEIGHT KG	45-61	62-80	81-97	98-114	115-136
WEIGHT LBS	99-135	136-176	177-214	215-251	252-300
CATEGORY	1	2	3	4	5

NOTE: The above categories apply only to Flex-Foot Assure

*All sizes not available for each category

ÖSSUR AMERICAS
27051 Towne Centre Drive
Foothill Ranch, CA 92610
TEL 800 233 6263 FAX 800 831 3160 www.ossur.com

ÖSSUR
Life Without Limitations®

FLEX-FOOT® ASSURE™

CLEARANCE

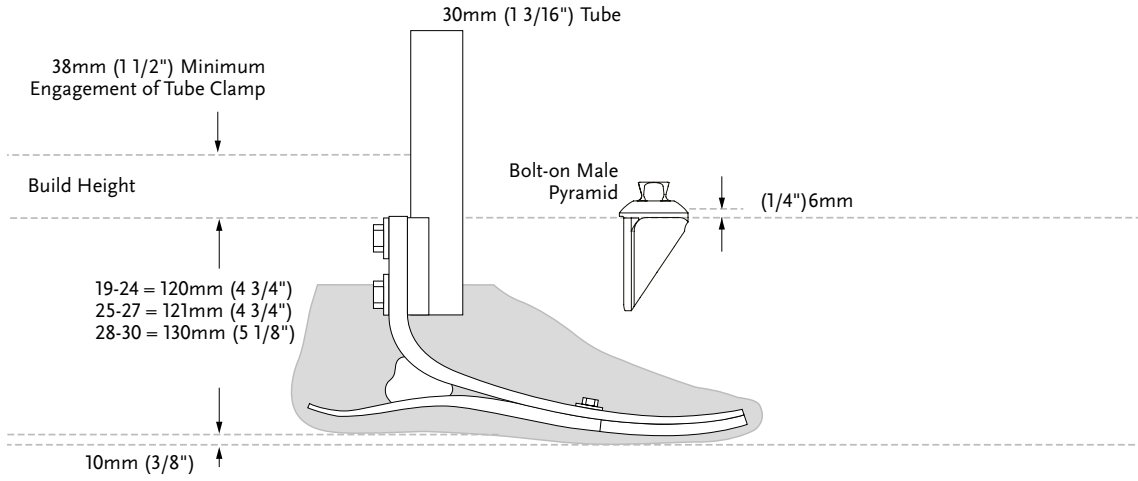

KITS

FLEX-FOOT ASSURE KIT WITH MALE PYRAMID

PART#

FAPO [ ][ ][ ][ ]

- CATEGORY (1-5)
- FOOT SIZE (19-30)
- L/R (LEFT/RIGHT)

Includes:

- Foot Module with Male Pyramid
- Foot Cover Kit*

*For Flex-Foot Assure with brown foot cover, add "BR" to the part#.

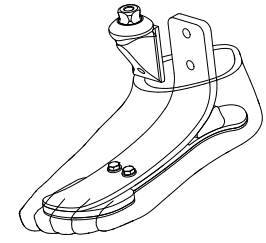

FLEX-FOOT ASSURE KIT WITHOUT ADAPTER

PART#

FAXO [ ][ ][ ][ ]

- CATEGORY (1-5)
- FOOT SIZE (19-30)
- L/R (LEFT/RIGHT)

Includes:

- Foot Module
- Foot Cover Kit*

*For Flex-Foot Assure with brown foot cover, add "BR" to the part#.

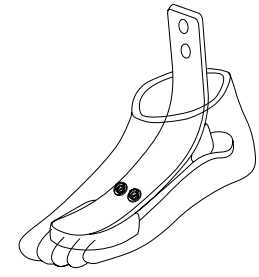

FLEX-FOOT® ASSURE™

COMPONENTS

MALE PYRAMID ADAPTER WITH BOLTS

PART#	CAT.	WEIGHT
SFX00165	ALL	3.08oz

30MM FIBERGLASS TUBE KIT

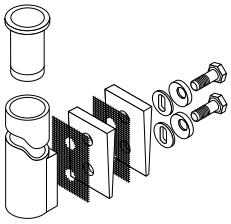

PART#	CAT.	WALL	THICKNESS		LENGTH		WEIGHT	
SFX00001	Red	1-3	3mm	1/8"	279mm	11"	292g	10.3oz
SFX00002	Red	1-3	3mm	1/8"	381mm	15"	333g	11.7oz
SFX00003	Green	4-5	4mm	3/16"	279mm	11"	331g	11.7oz
SFX00004	Green	4-5	4mm	3/16"	381mm	15"	401g	14oz

Includes:
- Tube Insert (cat. 4-5)
- Bolts (5/16" UNF)
- Spherical Washers
- Friction Pads
- Loctite 410
- Alignment Wedges

COSMETIC FINISHING

PART#

FCAO [ ][ ] [ ]
- FOOT SIZE (23-30)
- L/R (Left / Right)

Includes:
- Foot Module
- Foot Cover Kit*
- Foot Cover Attachment

NOTE: For sizes 19-21, use FCX0* instead of FCA0*

*For Flex-Foot Assure with brown foot cover, add "BR" to the part#.

PART#	DESCRIPTION	SIZE
FCX63006	Flex-Foot Sock	22-25
FCX63007	Flex-Foot Sock	26-30